GKN AUTOMOTIVE

Planetary Electric Drive Module with AC Induction Motor

H.-Joachim Schmeink
9/10.05.2019

EAWD'19

Content

- Introduction
- System overview and key technical data
- Thermal system development
- High temperature effects
- Oil and lubrication management
- Cooling
- Performance optimisation
- Conclusion

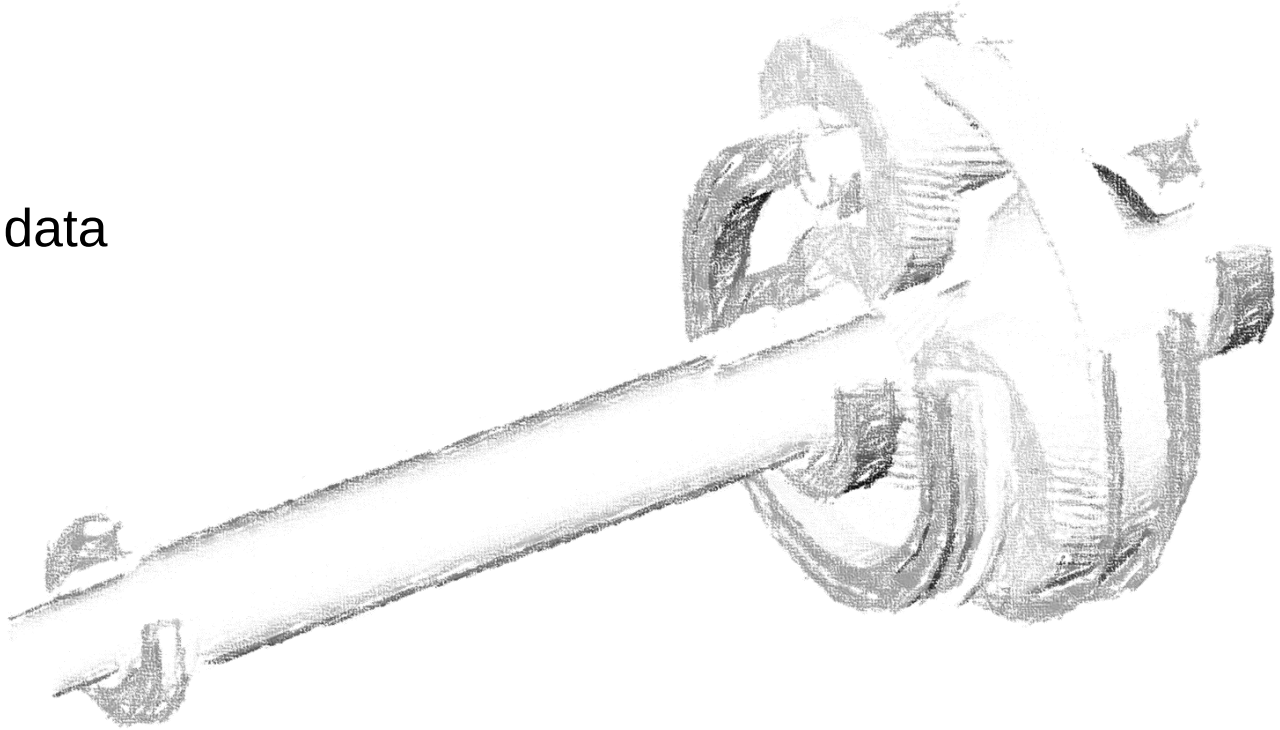

Global, localised manufacturing footprint

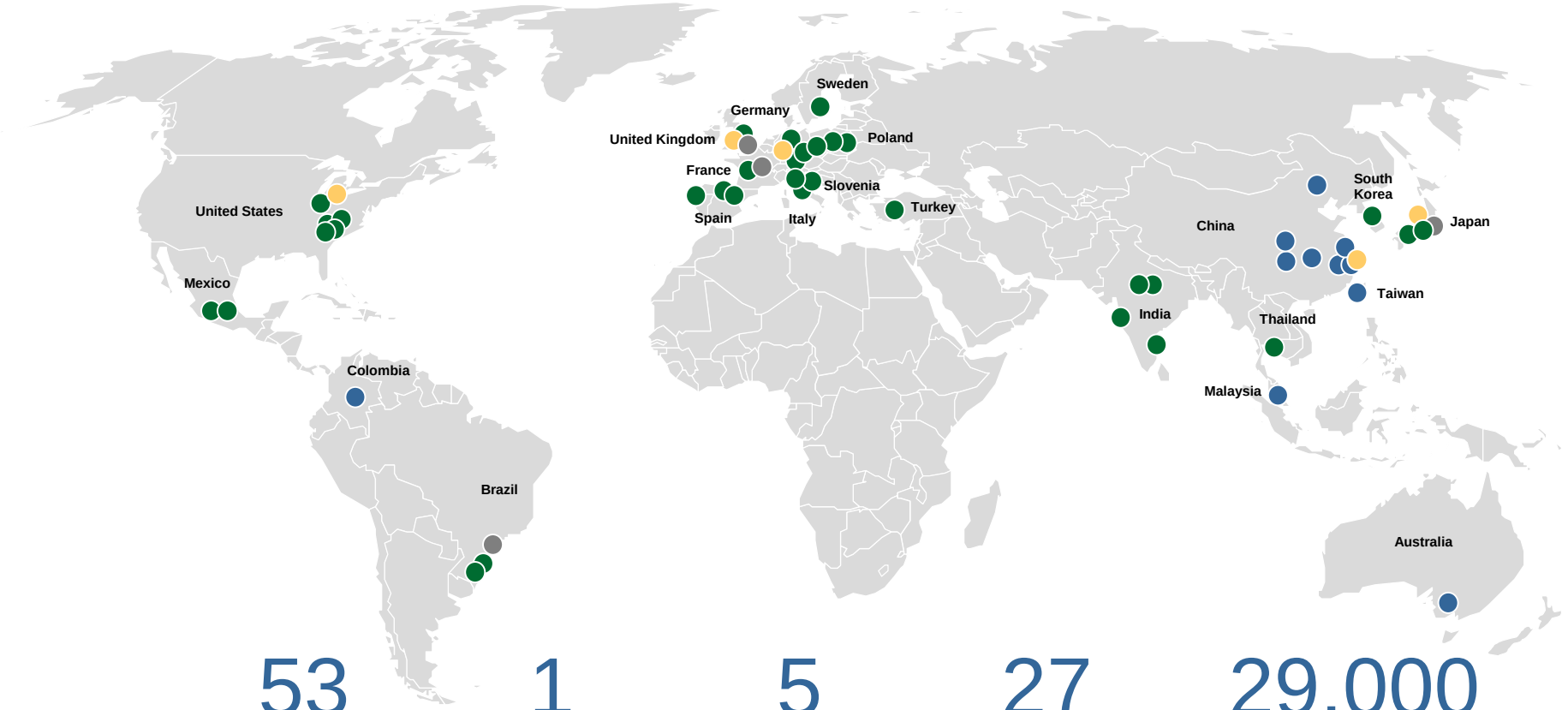

53 manufacturing locations

1 new world class facility in Japan

5 tech centres

27 countries

29,000 employees[1)]

1) Includes c. 5,700 employees in the China, Taiwan, Australia and Colombia JVs

Source: GKN, Financial Times, Bloomberg, Reuters, Wall Street Journal

World class innovation and engineering capabilities

Our in-house engineering capability…

5 **Technical centres**

2,124 **Engineers[1)]**
additional 379[2)] in China SDS JV

1,305 **Patents granted**
with 567 pending applications

… develops world class innovative technology


World's first 2-speed disconnecting eAxle


BMW VL3 Driveshaft system


Volvo eAxle

Modular lightweight front propshaft

First AWD system completely designed, integrated and produced in China

eTwinster and eTwinsterX

1) Including 852 manufacturing engineers; 2) Including 173 manufacturing engineers

Source: GKN

Heritage and Leadership in eDrive Technology

- More than 750,000 vehicles on the road today, using GKN eDrive technology
- Almost each year a new Hybrid & eDrive system has been launched in to production


Peugeot 3008 HY4


FIAT 500e


Mitsubishi Outlander


Volvo XC90


London Taxi


New Applications


Nissan Cube


Porsche 918 eSpyder


BMW i8


BMW Active Tourer


StreetScooter

2002 2012 2019

System Overview

Key application data

- Plug-in Hybrid Electric Vehicle
- Compact SUVs and mid sized cars
- Off-road capability
- All-wheel drive with electric P4 module
  and ICE at the front
- Max. electric vehicle speed 130 kph
- Max. vehicle speed with ICE 210 kph

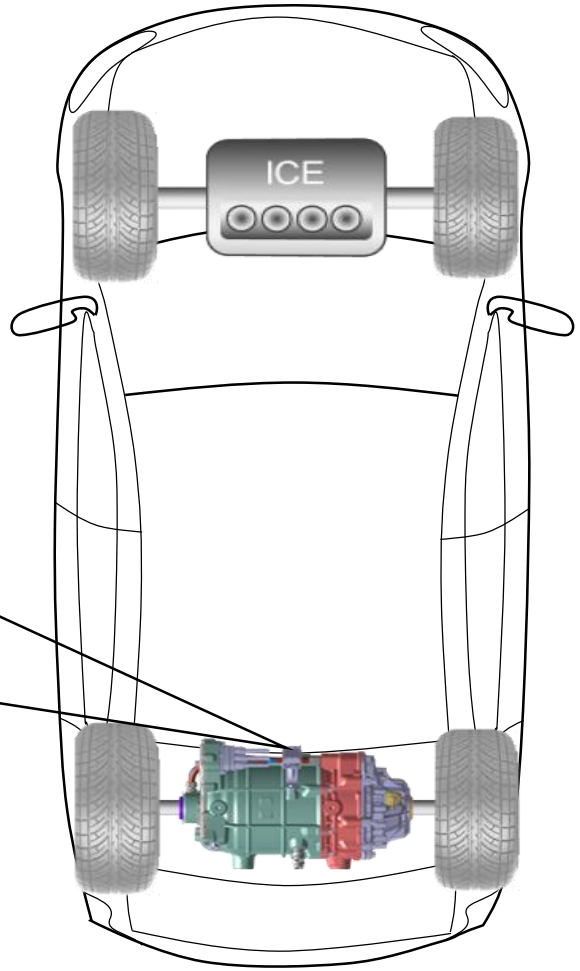

Coaxial System - Overview

Epicyclic Transmission

- Reduction ratio i=10.1 with stepped planets
- Max. input speed 15 500 rpm
- Splash lubrication with advanced oil management
- 2500 Nm output torque
- Open differential

Electric Traction Motor

- Induction motor
- Water cooled
- 250 Nm peak torque
- 250 V – 400 V operation range
- 70 kW peak (10s)
- 20 kW permanent power
- Semi integrated motor design

E-Motor Selection

- Various e-motor types could be used in the coaxial transmission arrangement. Two types of e-motor types have been rated regarding relevant features for this application. Some of these features are listed below.
- Competitive system costs, high speed capability, independence of rare earth materials may dominate the decision process.

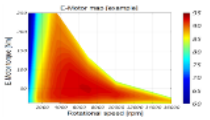

Rating	Comments
-	NOK
+	OK
++	Good
+++	Best

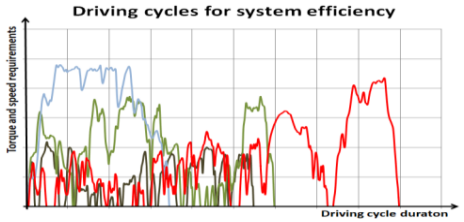

Transmission e-motor type for hybrid application Shown rating is based on GKN e-drive & hybrid experience. These features do have application specific nature.	**PSM** (PM-Synchronous Machine) 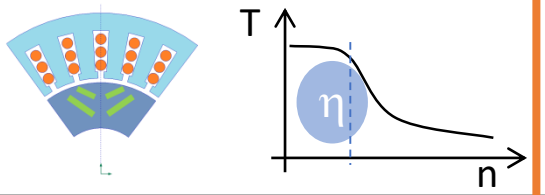	**ASM** (Asynchronous Machine) 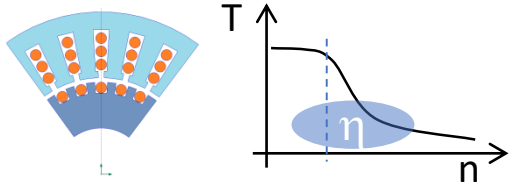
Packaging and power density	+++	+
Efficiency performance **including** system losses across driving cycle	+++ / ++ (T↑ & n↓ / T↓ & n↑)	++ / +++ (T↑ & n↓ / T↓ & n↑)
Manufacturing, robustness & costs	++	+++
Failsafe without inverter (Back-EMF)	-	+++
NVH performance	+++	++

System Design – Cross Section

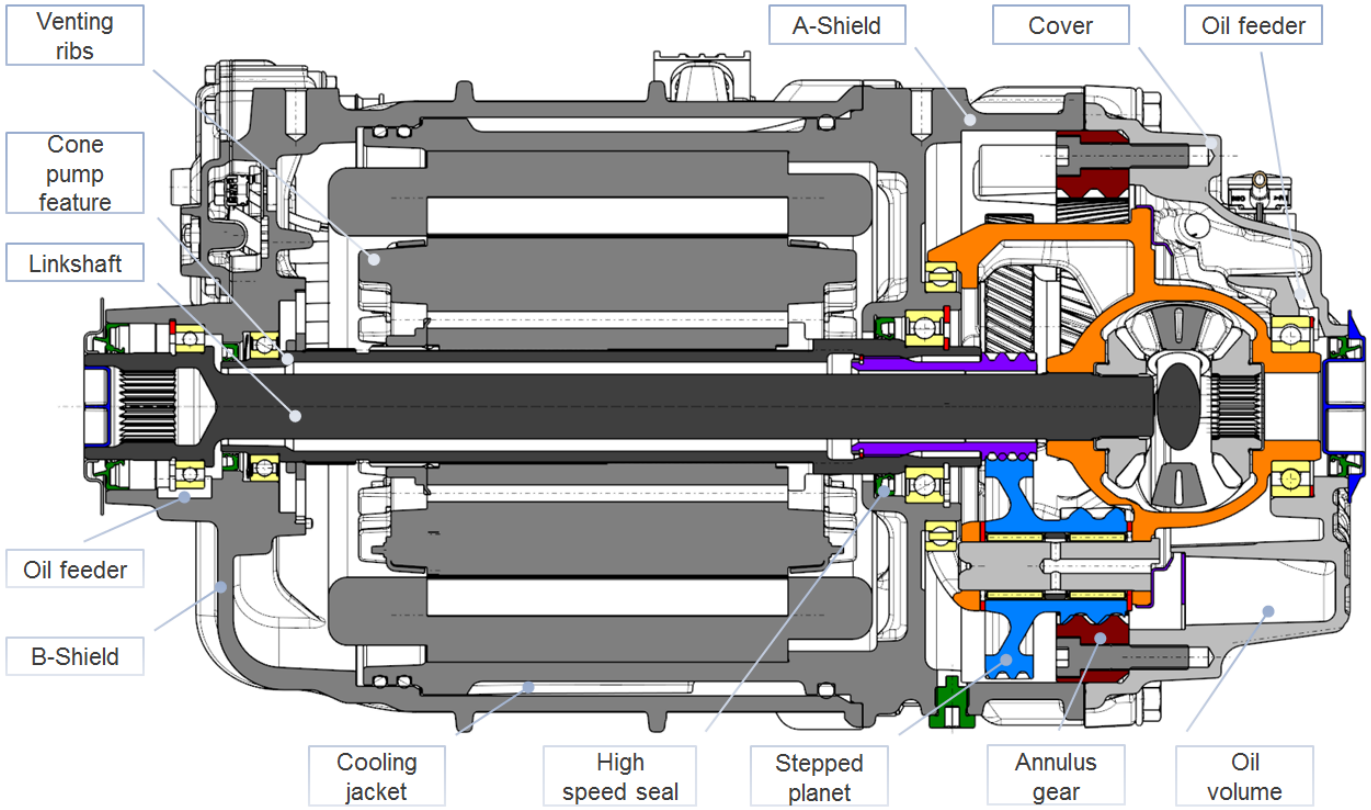

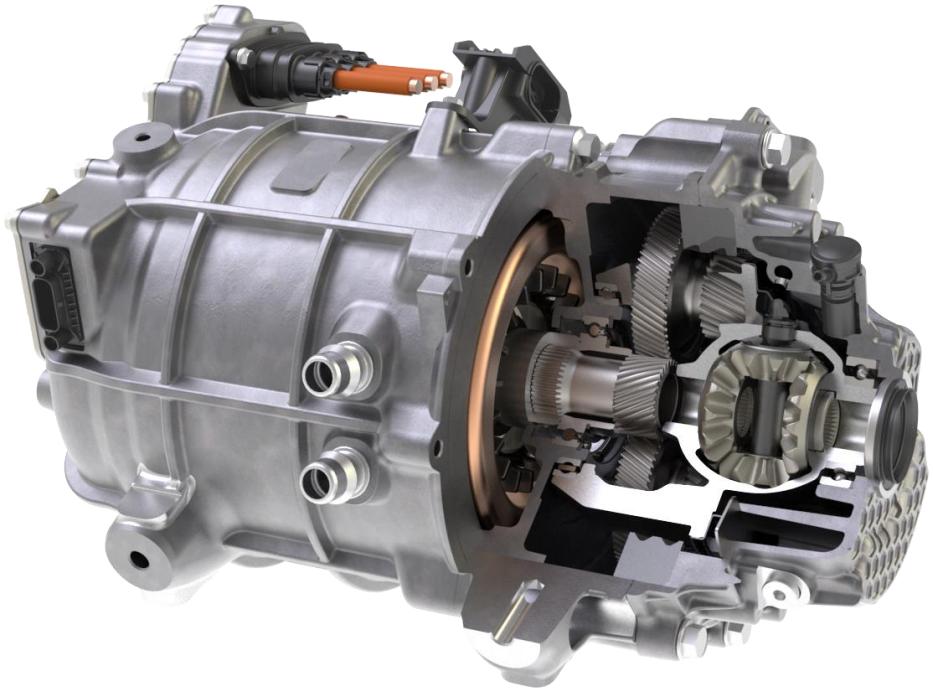

- Lifetime 240 000 km
- System weight 73 kg

➢ **Key challenge: Thermal system behaviour due to coaxial design combined with induction motor**

Thermal System Design – Most Severe Conditions

Mode	N (rpm)	T (Nm)	P (kW)	Time (sec)
Step mu launch	240	250	6	10
0-60 mph performance	7300	92	70	6
WLTP	8600	65	58	1
Combined driving cycles	9800	43	44	5
Max. EV speed	10000	36	38	10
22% grade climb in snow	1200	63	8	Continuous
Sand crawl	1400	65	10	Continuous
Continuous hill climb	2900	64	19	Continuous
Max. vehicle speed	15500	0	0	Continuous

Simulation

Gearbox Oil Temp.	Coolant Inlet Temp. [°C]				
Ambient Temp. [°C]	85	75	65	55	45
105	154	148	143	137	132
95	150	144	138	133	127
85	145	140	134	128	123
75	141	135	130	124	118
65	136	131	125	120	114
55	132	126	121	115	110
45	128	122	116	111	105

Simulation Results

- Continuous hill climb and maximum vehicle speed condition result in the highest oil sump temperatures
- Design maximum target temperature exceeded – further optimization required

Maximum Speed – Verification of Simulation

Parameter	Value	Unit
E-motor speed	15500	rpm
E-motor torque	0	Nm
Ambient temperature	105	°C
Cooling EM inlet	75	°C
Oil amount	800	ml

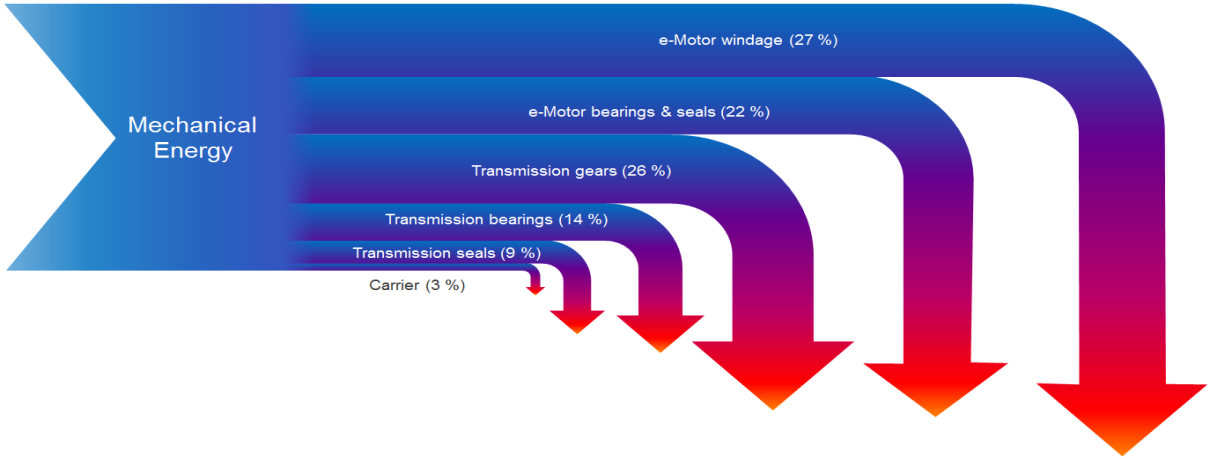

Verification Results

- Simulation agrees very well with verification test
- Measured oil sump temperature of 157° C exceeds design target – optimisation required
- Temperature simulation model verified for this operation point

Simulation

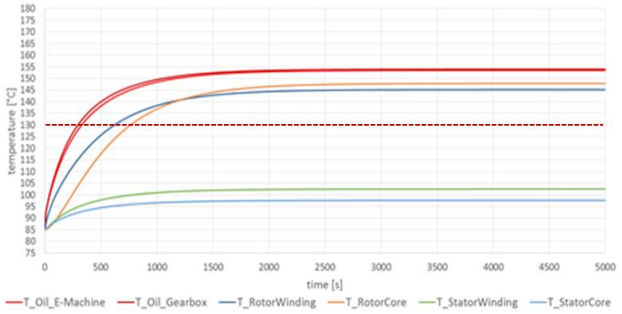

Measurement

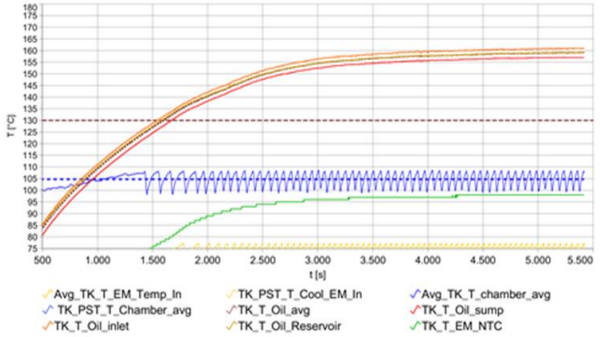

Hill-Climb – Verification of Simulation

Parameter	Value	Unit
E-motor speed	2900	rpm
E-motor torque	64	Nm
Ambient temperature	105	°C
Cooling EM inlet	75	°C
Oil amount	800	ml

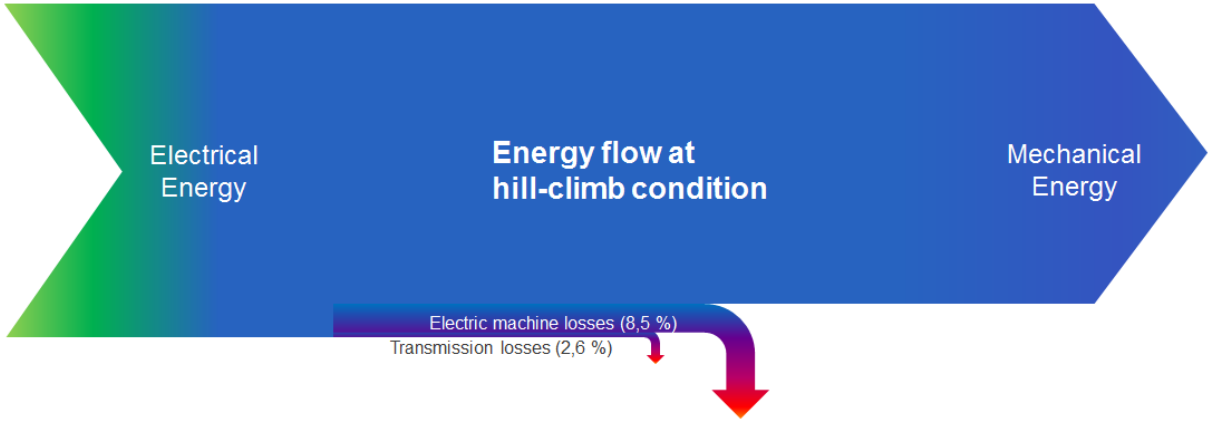

Verification Results

- Measured temperature of 110°C fits well to the predicted temperature of 107°C
- Simple E-motor model not suitable to predict sub-component temperatures
- Simulation model was verified on system level and can be used for the system optimisation

Simulation

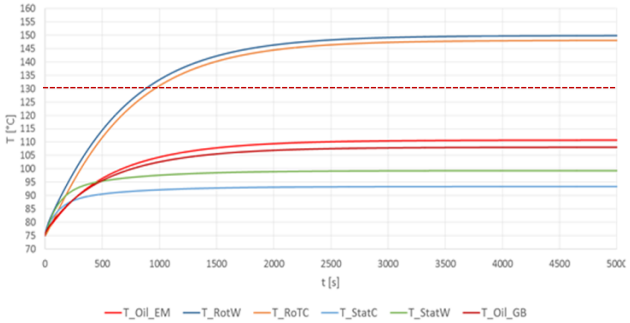

Measurement

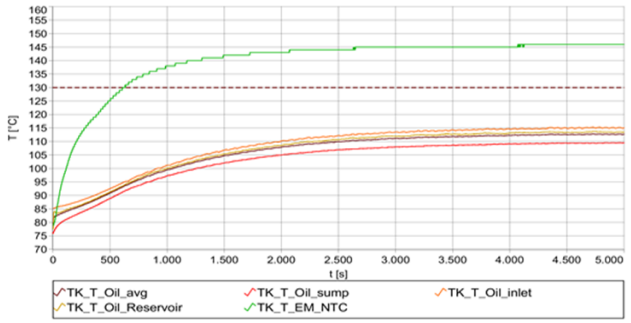

High Temperature Oil Selection

Oil screening

- Four potential oil canditates tested in laboratory
- Colour change, viscosity change and neutralization values measured
- Suitable was oil identified and verified in further testing (Oil 1)

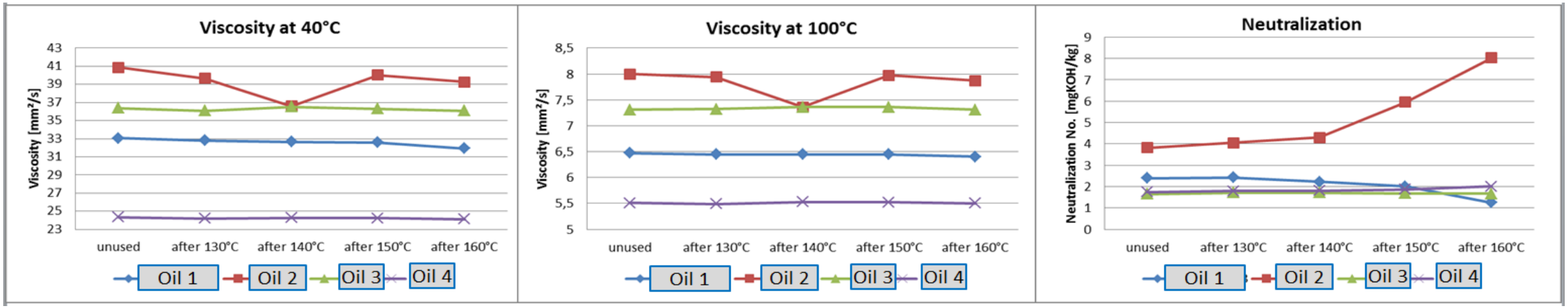

System Losses

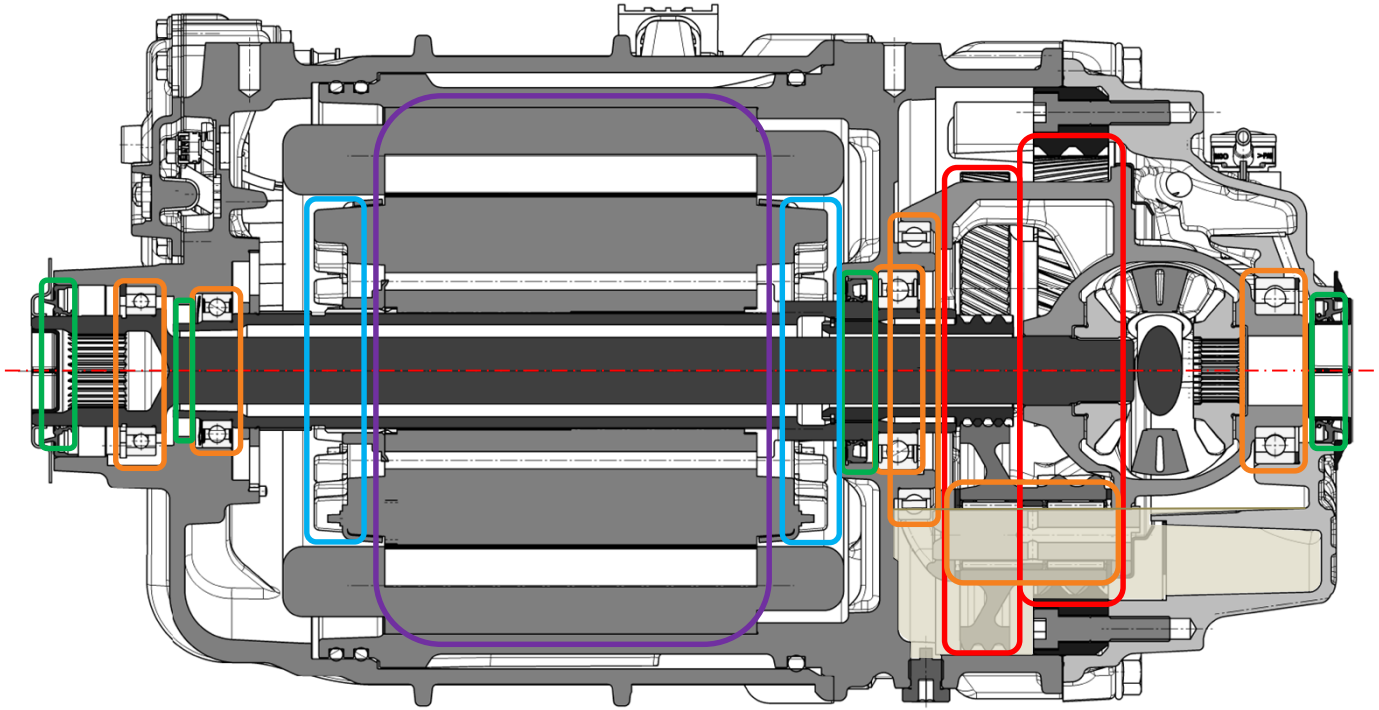

Gear mesh
(gearbox)

Churning losses
(rotating parts in gearbox oil)

Bearing losses
(gearbox and E-Motor)

Sealing losses
(gearbox and E-Motor)

Electric losses
(E-Motor)

Ventilation losses
(E-Motor-Fan)

Main contributors for losses in „Maximum Speed“ condition

- Churning losses
- Motor windage losses

Churning Losses

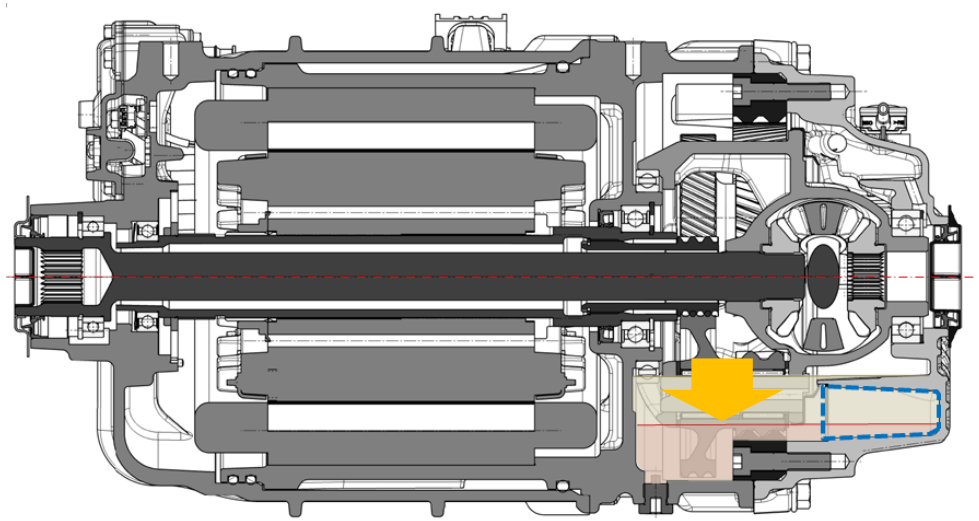

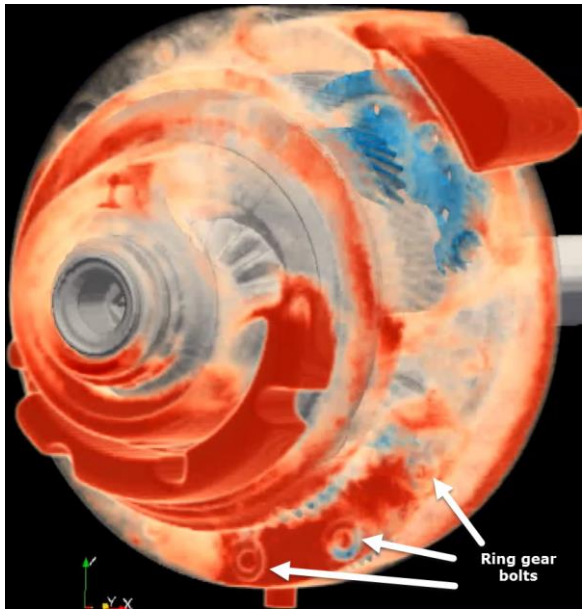

Reduction of churning losses

- Low viscosity oil
- Lowering oil level – significant impact, test showed a temperature reduction of 35% when the oil level was reduced by 30%
- Fluidic optimisation

Lubricant Management

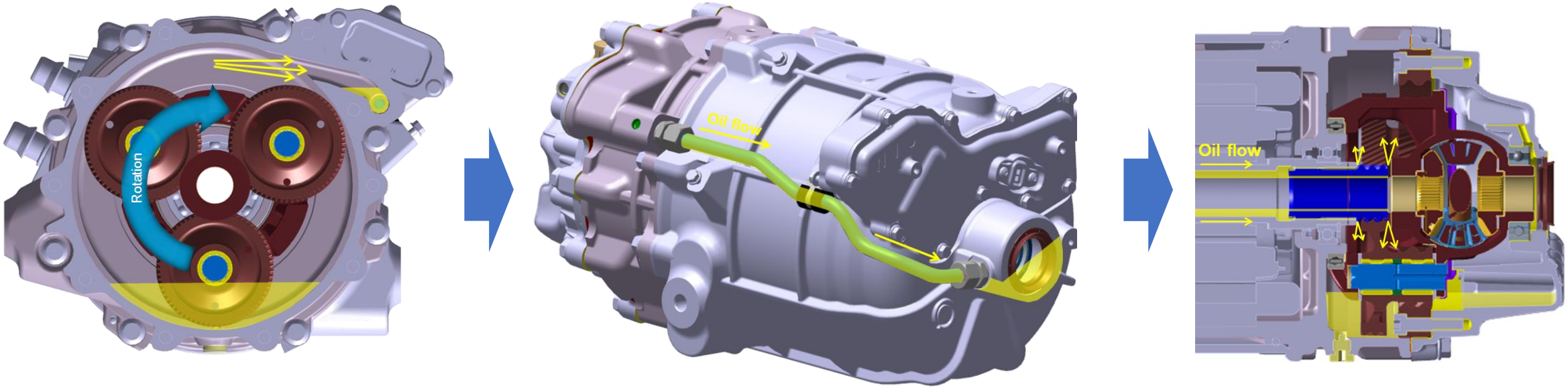

Patents pending

Lubrication concept

- Rotation of planetary gear set feeds oil into distribution cascade
- Internal channels feed some of this oil to bearings and sealings
- Remaining volume flows through external pipe to motor B-shield bearing and seal
- Motor shaft conical geometry forces oil back into gearbox

Thermal Management

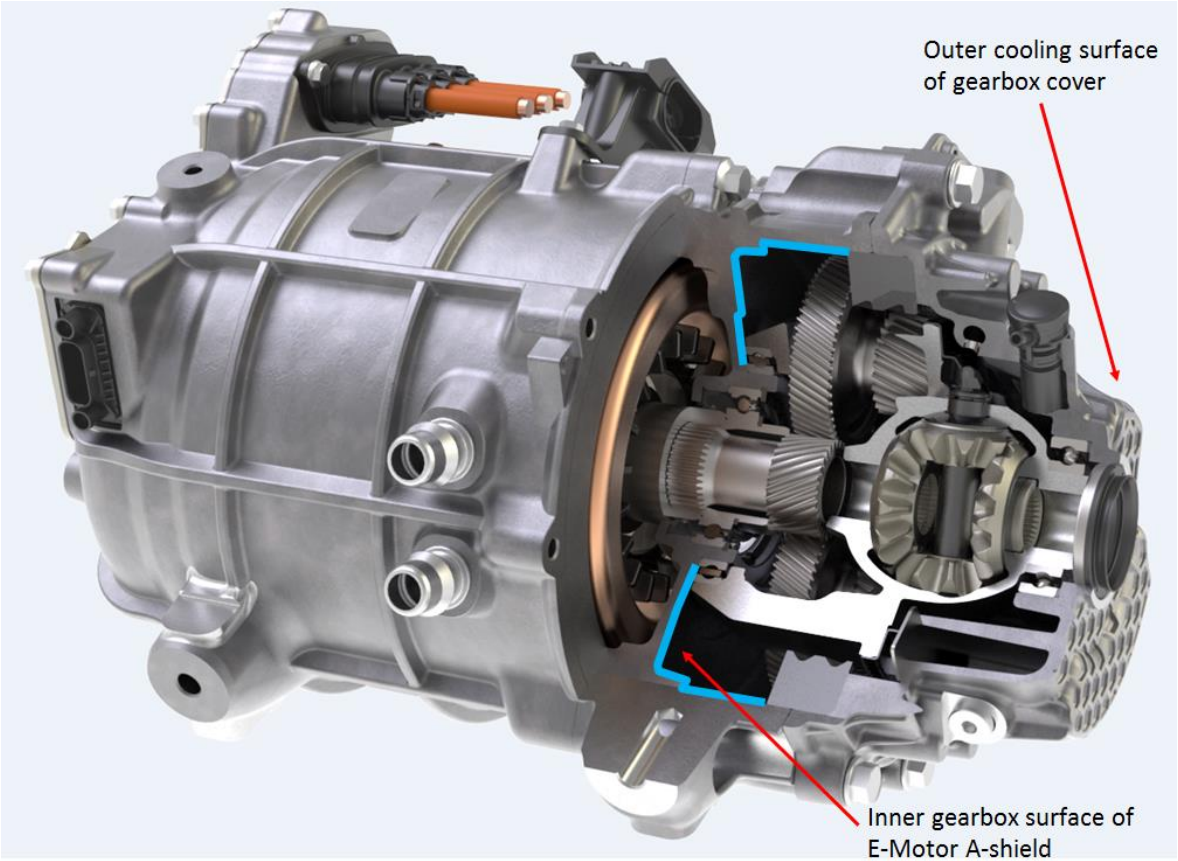

System Cooling

- Cooling capacity of the electric motor is able to transfer the total system losses.
- Motor A-shield geometry is used as heat exchanger to cool the gearbox
- Open surface of transmission is cooled in addition by forced air due to vehicle speed or free convection when vehicle is at stand still.

Patents pending

Torque Vectoring Modularity

Exchange of the open differential for a GKN Twinster module allows to add full torque vectoring capability to the electric drive module.

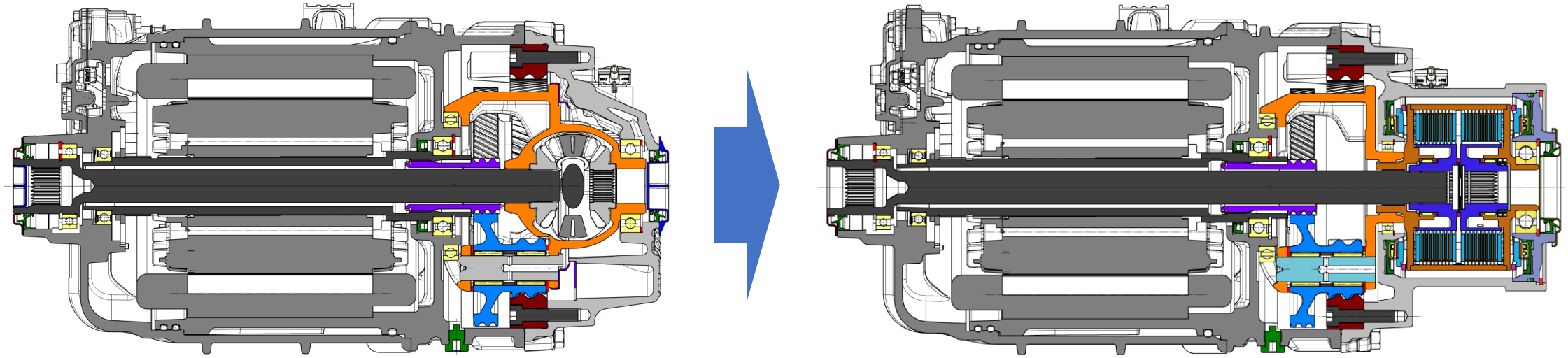

Open Differential
(series design)

(concept design)

Performance Optimisation

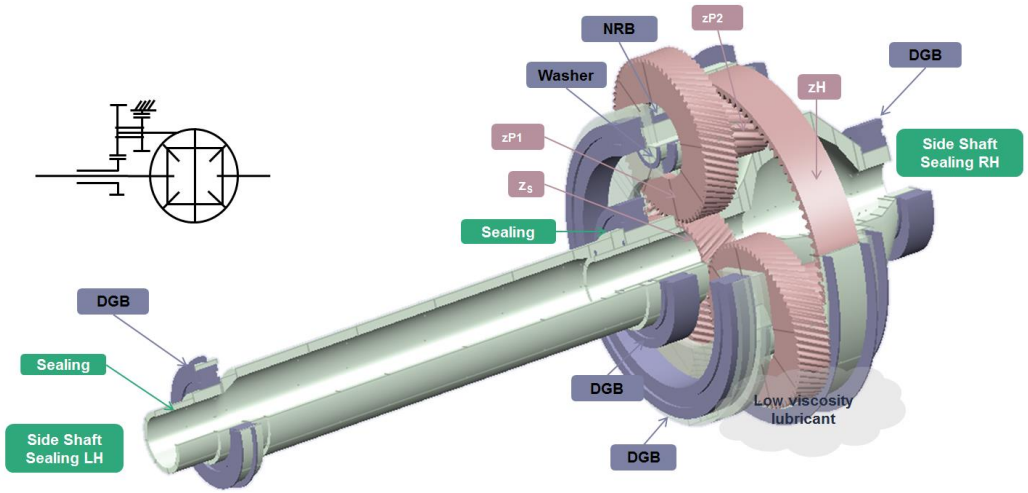

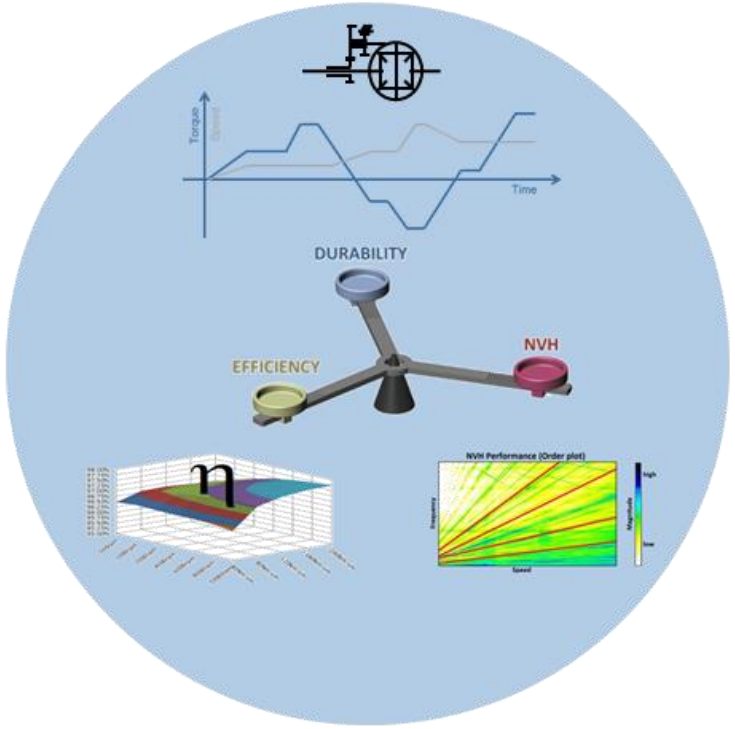

Virtual Transmission Engineering

- Define the optimum transmission concept
- Optimise the system performance parameters by simulation and verify with physical tests.

Transmission system footprint related to fatigue, efficiency and NVH
Dr. Artur Grunwald – Dritev – Getriebe in Fahrzeugen 2019 am 10. und 11. Juli in Bonn

Summary

Key Points

- GKN's deep in-house technical expertise together with more than 15 years series production experience in e-drive applications helped to achieve the demanding programme targets.
- Systems Engineering Methods were used to develop and industrialize the product simultaniously in two markets – Europe and China
- The development of a bespoke product taylored to the customer requirements ensures that the requirements and expectations are met in an optimum way.

Global Leader in traditional and electrified drivelines